The Pumps with Nine Lives

Pump Catalogue

Product Quality, Reliability and Support You Expect

www.catpumps.co.uk

World Leader in Triplex Reciprocating High-Pressure Pumps

Cat Pumps designs and builds products to the highest quality level for one major reason: our customers depend on our products to keep their equipment running. Every design detail is optimised for long product life and reliable performance.

Cat Pumps embraces a zero defect manufacturing philosophy. Stringent process controls result in highly repeatable processes, yielding the highest level of product reliability. Cat Pumps commitment to quality is legendary within the industry, earning the trust from customers worldwide. When it needs to run, make it Cat Pumps.

Product Performance Range

A wide range of pump options are available, including a variety of products that meet various industry certifications and directives.

- Flow: 0.13 to 240 gpm (0.49 to 908 lpm)
- Pressure: 100 to 10,000 psi (6.9 to 689 bar)
- RPM: 100 to 3450
- Liquid Temperature: -10° to 240°F (-23° to 115°C)
- Manifold Materials: Brass, Nickel Aluminum Bronze, 304 and 316 Stainless Steel, Duplex Stainless Steel
- Drives: Electric, Engine, Hydraulic, Pneumatic

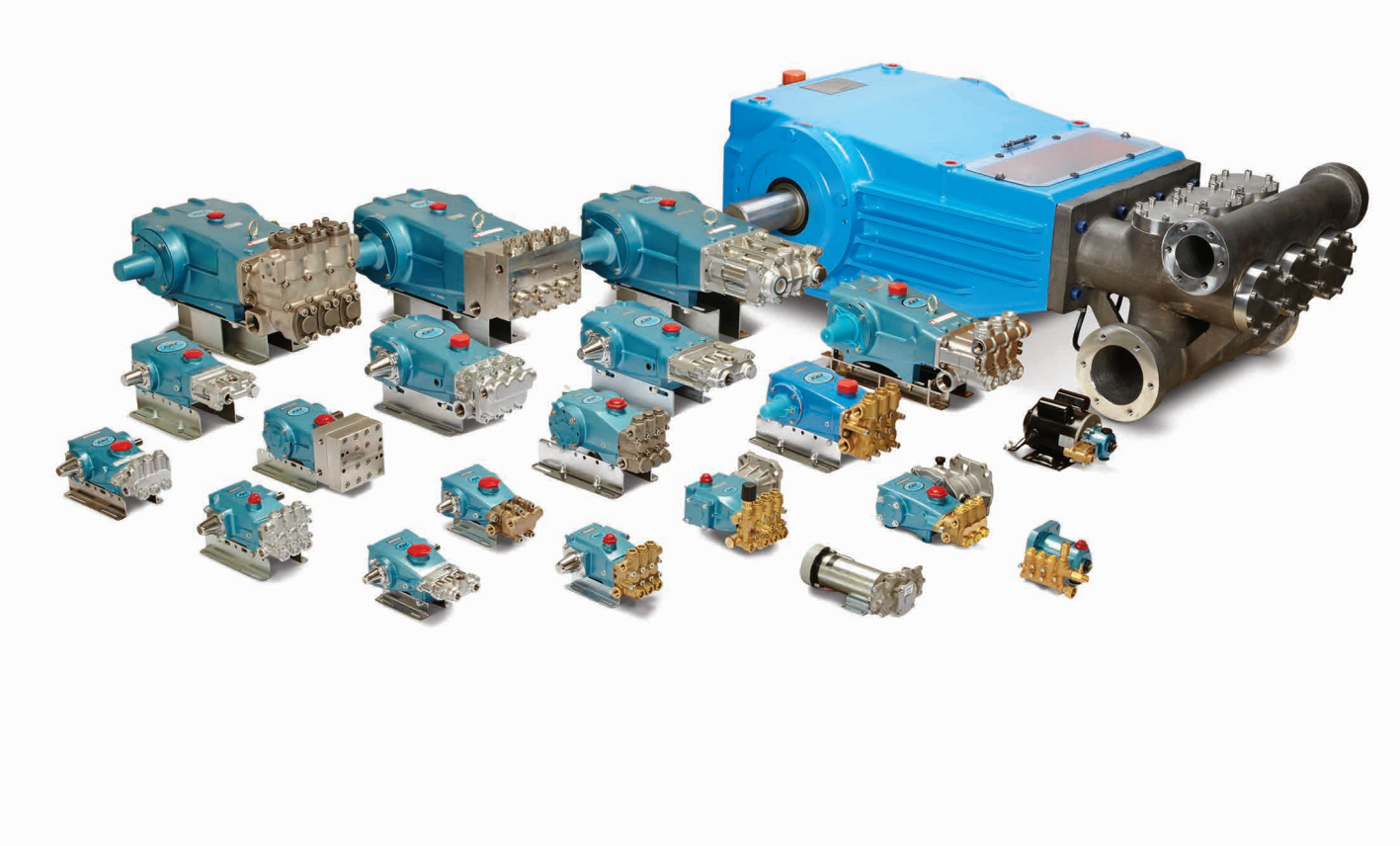

Product Ordering

Using This Catalogue

The pump sections of this catalogue are organised by drive type/flow rate/manifold materials: brass, 316 stainless steel, duplex stainless steel and nickel aluminum bronze. The model numbers listed represent standard pumps equipped with Buna-N seals and O-rings, except for specialty pumps, such as CO_2, TEG and portable extractor, which are fitted with unique seals for the application.

Standard Buna-N pump seals and/or O-rings can be changed by adding a suffix to the standard model number that represents the desired new seal material.

Optional Seal and O-Ring Configurations

MATERIAL CODE	DESCRIPTION	MAX. TEMPERATURE *	PUMP MODEL SUFFIX
NBR	Medium Nitrile (Buna-N) seals and O-Rings	160°F (71°C)	—
FPM	Fluorocarbon (Viton®) seals and O-Rings, chemical resistance	180°F (82°C)	.0110
EPDM	Ethylene Propylene Diene Monomer seals and O-Rings	160°F (71°C)	.0220
HT	High-temperature high pressure seals	180°F (88°C)	.3000
STHT	High-temperature high pressure seals, special Teflon® low-pressure seals, NBR O-Rings	190°F (88°C)	.3400
	High-temperature high pressure seals, special Teflon® low-pressure seals, FPM O-Rings	190°F (88°C)	.3410
PTFE	Pure Polytetrafluoroethylene (Teflon®) Seals and Buna-N O-Rings	190°F (88°C)	.0700
	Pure Polytetrafluoroethylene (Teflon®) Seals and FPM O-Rings	200°F (93°C)	.0710
IPFE	I-Perfluoroelastomer (Teflon®) Seals and Isolast O-Rings	200°F (93°C)	.0770
ST4	Special blend PTFE high and low pressure seals, Buna-N O-Rings	190°F (88°C)	.4400
	Special blend PTFE high and low pressure seals, FPM O-Rings	200°F (93°C)	.4410
NBRS	Buna-N silicone free seals and O-Rings	160°F (71°C)	.6000

FPM = Fluorocarbon, EPDM = Ethylene Propylene Diene Monomer, HT = High Temp (EPDM Alternative), STHT = Special PTFE High Temperature

PTFE = Pure Polytetrafluoroethylene, IPFE = I-Perfluoroelastomer, ST4 = Speical PTFE 4, NBR = Medium Nitrile (Buna-N), NBRS = Buna-N silicon free seals and O-Rings

* See individual data sheet for each pump to verify actual maximum temperature allowed.

Viton® and Teflon® are registered trademarks of DuPont Dow Elastomers.

Example

Pump model 3535 can be changed from Buna-N to either FPM or EPDM. To convert pump model 3535 from Buna-N seals and O-rings to FPM (Viton®), add the suffix (.0110) to the standard pump model number (3535.0110). Use this new number when ordering the pump.

Cat Pumps configures a number of pumps for special applications and certifications such as ATEX, CO_2, TEG, Flushed, High-Temp and others. Please contact Cat Pumps directly at (01252) 622031 for more information.

Table of Contents

Direct Drive Plunger Pumps 6
Hollow Shaft: Brass Manifold 6
Hollow Shaft: 316 Stainless Steel 7
Gearbox: Brass Manifold 7
Gearbox: 316 Stainless Steel Manifold 7
Bell Housing: Brass Manifold 8
Bell Housing: 316 Stainless Steel Manifold 8
Bell Housing: 316 Nickel Aluminum Bronze Manifold 8
Belt Drive Plunger Pumps
Brass and 304 Stainless Steel 9 – 10
316 Stainless Steel 11
Duplex Stainless Steel 12
Nickel Aluminum Bronze 12
Piston Pumps 13
Specialty Pumps 14
Flushed Manifold Pumps 14
High Temperature Pumps 15
Triethylene Glycol (TEG) Pumps, 240° F 15
Washout Resistant Pumps 16
Liquid CO_2 Pumps 16
ATEX Pumps 16
1XP Series Portable Extractor Pumps 17
Engineered Packages 18 – 19

Selecting your pump

Plunger Pumps (0.13 – 240 gpm, 100 – 10,000 psi)

Plunger pumps utilise spring-loaded closed and hydraulically opened inlet and discharge valves to direct flow through the pump manifold. At the beginning of the stroke, the plunger displaces the liquid in the manifold chamber, forcing the discharge valve open. When the plunger reaches the end of the stroke, the discharge valve closes. As the plunger rod begins its backward stroke, the inlet valve opens to allow more liquid into the manifold chamber, thereby keeping a smooth forward flow of liquid.

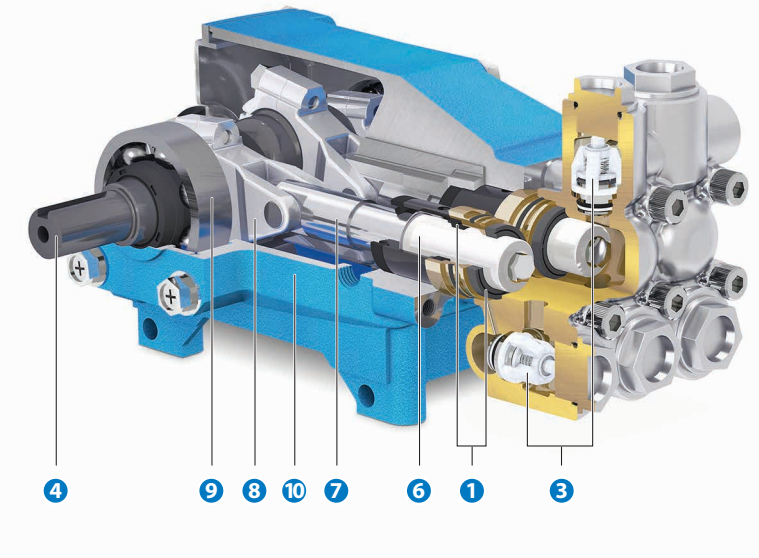

XP Series Pumps (0.5 – 2 gpm, 100 – 1,000 psi)

In XP series pumps, fluid enters the inlet port and flows through the drive-end, lubricating the connecting rods and plunger rods as it passes to the inlet valves. Both inlet and discharge valves are spring-loaded closed and hydraulically opened, similar to plunger pumps, however, they utilise a flow- through ceramic plunger design. The continuous forward flow characteristics in conjunction with the packing design of plunger pumps result in improved suction capabilities as well as extended seal life.

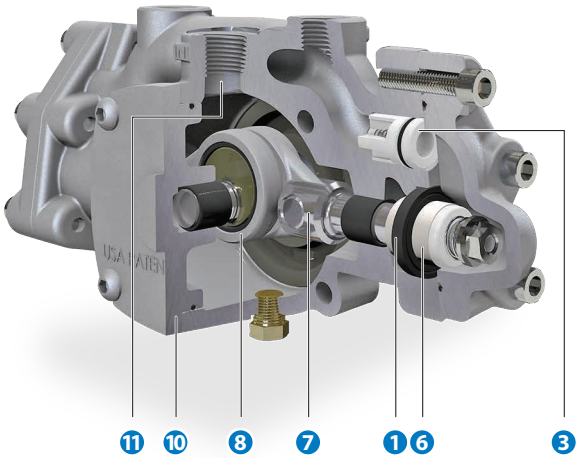

Features

1. Specially formulated, Cat Pumps exclusive high pressure and low pressure seals offer unmatched performance and seal life.
2. 100% wet cup/seal design adds to service life by allowing pumped fluids to cool and lubricate the elastomers on both sides.
3. Stainless steel valves, seats, and springs provide corrosion-resistance, positive seating, and long life.
4. Chrome-moly crankshaft provides unmatched strength and surface hardness for long life.
5. The patented stepped piston rod with hard chrome-plated sleeve provides a durable wear surface and easy wet end servicing.
6. Precision-polished, solid ceramic plungers provide maximum resistance to corrosion and abrasion, extending seal life.

Piston Pumps (3.0 – 60 gpm, 100 – 1,500 psi)

The design of the piston pump is for the fluid to move continually in one, smooth forward direction. This design allows greater suction capabilities and reduces the risk of cavitation provided the pump is properly primed. At the beginning of the stroke, the mechanically actuated inlet valve (and piston) will close. As the piston rod moves forward, the liquid is forced out through the discharge valves. Simultaneously, the liquid enters the pump inlet and flows in behind the inlet valve. As the piston rod begins the backward stroke, the inlet valve mechanically opens, permitting the liquid to continue its flow forward through the piston into the discharge chamber.

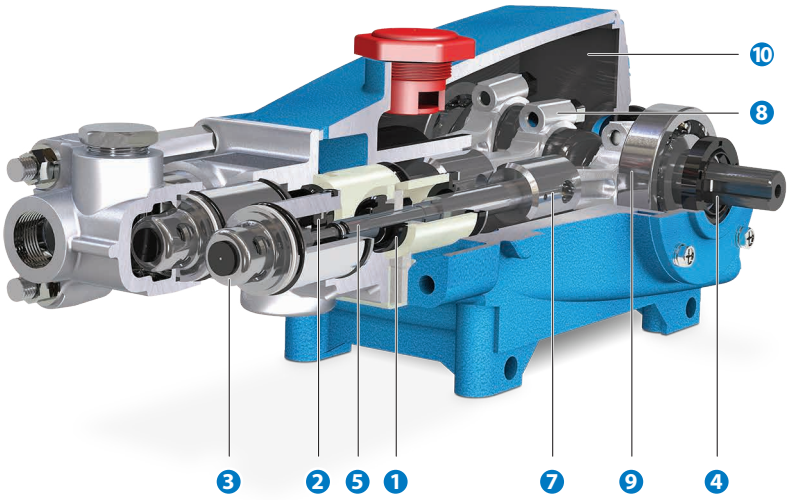

SF Series Pumps (0.5 – 5 gpm, 100 – 3,500 psi)

In SF series pumps, both the inlet and discharge valves are spring-loaded closed and hydraulically opened, similar to plunger pumps, however, they have a flow- through ceramic plunger design. The continuous forward flow characteristic of piston pumps is utilised in conjunction with the packing design of the plunger pumps. These features give SF pumps both strong suction capabilities and higher pressure performances.

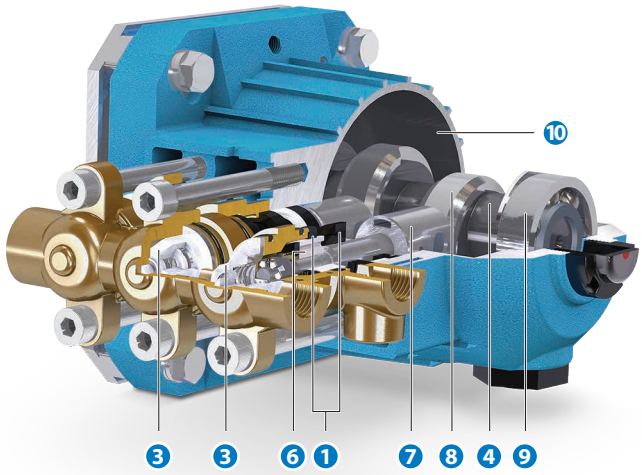

7 The high strength stainless steel plunger rods have a 360° supported crosshead providing uncompromising plunger rod alignment.

8 Matched oversized connecting rods are made of high strength material with exceptional bearing quality.

9 Oversized ball bearings or tapered roller bearings provide extended bearing life.

10 High Strength, light weight die cast aluminum crankcase with splash oil design allows operation at speeds as low as 100 RPM.

11 Patented greaseless design uses water from inlet as lubrication, eliminating the maintenance and mess of grease or oil.

Plunger Pumps

Model 4DX10ER

DIRECT DRIVE, HOLLOW SHAFT, BRASS MANIFOLD
Electric Motor, 5/8" and 3/4", 56C Face

PUMP MODEL	MAXIMUM FLOW		MAXIMUM PRESSURE		RPM	SHAFT
	gpm	lpm	psi	bar		
4DX03ELR	0.3	1.1	2000	138	1725	5/8"
4DX10ER	1.0	3.8	2000	138	3450	5/8"
4DX15ER	1.5	5.7	2000	138	3450	5/8"
4DX20ER	2.0	7.6	2000	138	3450	5/8"
4SP21ELR	2.1	7.9	2000	138	1750	5/8"
4DX27ER	2.7	10.3	2000	138	3450	5/8"
4SP29ELR	2.85	10.8	1200	83	1725	5/8"
4DX30ER	3.0	11.4	2000	138	3450	5/8"
2SF30GES	3.0	11.4	2000	138	3450	3/4"
2SF35ES	3.5	13.3	1500	103	3450	5/8"
2SF35GES	3.5	13.3	2000	138	3450	3/4"
2SFP500EL	5.0	19.0	500	34.5	1750	5/8"

Note: Pumps rated at 3450 rpm can operate at 1725 rpm, reducing flow by 50%.

$$\text{Electric Brake Hp} = \frac{\text{gpm x psi}}{1460}$$

Model 2SF22ES

DIRECT DRIVE, HOLLOW SHAFT, BRASS MANIFOLD
Electric Motor, 1 1/8", 184TC Face

PUMP MODEL	MAXIMUM FLOW		MAXIMUM PRESSURE		RPM	SHAFT
	gpm	lpm	psi	bar		
5SP30ELR	3.0	11.4	3000	207	1750	1-1/8"
5SP35ELR	3.5	13.3	2500	172	1750	1-1/8"
5SP40ELR	4.0	15.2	2000	138	1750	1-1/8"

$$\text{Electric Brake Hp} = \frac{\text{gpm x psi}}{1460}$$

Model 5SP35ELR

DIRECT DRIVE, HOLLOW SHAFT, BRASS MANIFOLD
Engine, 3/4"

PUMP MODEL	MAXIMUM FLOW		MAXIMUM PRESSURE		RPM	SHAFT	HP
	gpm	lpm	psi	bar			Typical Gas Engine*
4DNX25GSI	2.5	9.5	3000	207	3450	3/4"	6.5
4DNX27GSI	2.7	10.3	3000	207	3450	3/4"	8
4DX29GUIF	2.9	11.0	2600	179	3450	3/4"	6.5
2SF35GS	3.5	13.3	2000	138	3450	3/4"	8

*Consult engine manufacturer for actual torque available at required speed.

Model 66DX40G1I

DIRECT DRIVE, HOLLOW SHAFT, BRASS MANIFOLD
Engine, 1"

PUMP MODEL	MAXIMUM FLOW		MAXIMUM PRESSURE		RPM	SHAFT	HP
	gpm	lpm	psi	bar			Typical Gas Engine*
66DX30G1I	3.0	11.4	4000	276	3450	1"	13
4SPX32G1I	3.2	12.2	3000	207	3450	1"	9
66DX35G1I	3.5	13.3	4000	276	3450	1"	13
66DX40G1I	4.0	15.2	4000	276	3450	1"	16
66DX50G1I	5.0	19.0	3500	241	3400	1"	13

*Consult engine manufacturer for actual torque available at required speed.

Plunger Pumps

DIRECT DRIVE, HOLLOW SHAFT, 316 STAINLESS STEEL MANIFOLD
Electric Motor, 5/8", 56C Face

PUMP MODEL	MAXIMUM FLOW		MAXIMUM PRESSURE		RPM	SHAFT
	gpm	lpm	psi	bar		
2SF05SEEL	0.5	1.9	1200	83	1725	5/8"
2SF10SEEL	1.0	3.8	1200	83	1725	5/8"
2SF15SEEL	1.5	5.7	1200	83	1725	5/8"
2SF22SEEL	2.2	8.4	1200	83	1725	5/8"
2SFQ25SEEL	2.5	9.5	1200	83	1725	5/8″
2SFQ29SEEL	2.85	10.8	1200	83	1725	5/8″
2SFQ35SEEL	3.5	13.3	1200	83	1725	5/8″
2SFQ42SEEL	4.2	15.9	1000	69	1725	5/8″

Model 2SF22SEEL

$$\text{Electric Brake Hp} = \frac{\text{gpm x psi}}{1460}$$

DIRECT DRIVE, HOLLOW SHAFT GEARBOX, BRASS MANIFOLD
Engine, 3/4" and 1"

PUMP MODEL	MAXIMUM FLOW		MAXIMUM PRESSURE		RPM	SHAFT	HP
	gpm	lpm	psi	bar	Engine		Typical Gas Engine*
740G1	2.8	10.6	5000	345	3465	1"	13
3CP1120G	3.5	13.3	2200	152	3600	3/4"	8
760G1	3.5	13.3	5000	345	3465	1"	16
5CP3160CSSG1	4.0	15.2	3500	241	3320	1"	13
5CP3120CSSG1	4.5	17.0	3500	241	3353	1"	16
60G1	4.5	17.0	4000	276	3450	1"	18
700G1	4.5	17.0	5000	345	3465	1"	20
5CP3150CSSG1	5.0	19.0	3000	207	3450	1"	13
5CP5135CSSG1	5.8	21.9	3500	241	3450	1"	13
5CP5140CSSG1	6.2	23.4	3000	207	3450	1"	18
5CP6120CSSG1	7.2	27.2	1500	103	3450	1"	8
5CP6180CSSG1	8.0	30.4	1500	103	3450	1"	11
56G1	8.0	30.4	2500	172	3600	1"	16
56HSG1	8.0	30.4	3000	207	3600	1"	22
5CP6190G1	9.7	36.7	1200	83	3450	1"	11
7CP6110CSG1	10.0	38.0	2000	138	3400	1"	18
7CP6160CSG1	10.0	38.0	2500	172	3400	1"	22
7CP6170G1	12.0	45.4	1800	124	3264	1"	16

Note: All 1" Gearboxes are also available in 1 1/8" size (G118)
*Consult engine manufacturer for actual torque available at required speed.

Model 56G1

Model 5CP3120CSSG1

DIRECT DRIVE, HOLLOW SHAFT GEARBOX, 316 STAINLESS STEEL MANIFOLD
Engine, 3/4" and 1"

PUMP MODEL	MAXIMUM FLOW		MAXIMUM PRESSURE		RPM	SHAFT	HP
	gpm	lpm	psi	bar	Engine		Typical Gas Engine*
3CP1241G	3.0	11.4	2000	138	3600	3/4"	5
3CP1211G	3.8	14.4	1500	103	3400	3/4"	5
5CPQ6241CSG1	4.0	15.2	2000	138	3600	1"	8
781G1	4.5	17.0	5000	345	3645	1"	20
5CPQ6251G1	5.0	19.0	2000	138	3600	1"	9
5CPQ6221G1	7.4	28.0	1200	83	3600	1"	8
7CP6111CSG1	10.0	38.0	2000	138	3400	1"	18

Note: All 1" Gearboxes are also available in 1 1/8" size. (G118). *Consult engine manufacturer for actual torque available at required speed.

Model 7CP6111CSG1

Plunger Pumps

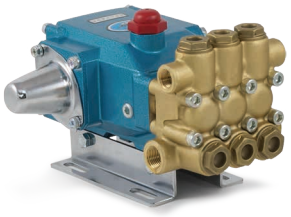

Model 3CP1120

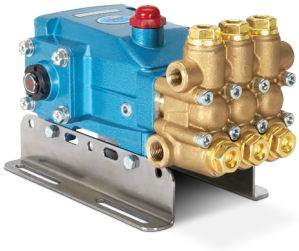

Model 5CP3160CSS

DIRECT DRIVE, SOLID SHAFT, BRASS MANIFOLD

Electric Motor - Bell Housing

PUMP MODEL	MAXIMUM FLOW		MAXIMUM PRESSURE		RPM	SHAFT
	gpm	lpm	psi	bar		
5CP4110CSS	2.2	8.4	4000	276	1750	20 mm
3CP1130	2.4	9.1	2200	138	1725	16.5 mm
5CP3105CSS	2.5	9.5	3500	241	1750	20 mm
5CP4112CSS	2.7	10.3	4000	276	1750	20 mm
740	2.9	11.0	5000	345	1750	24 mm
5CP4114CSS	3.2	12.1	4000	276	1750	20 mm
3CP1140	3.6	13.7	2200	152	1725	16.5 mm
5CP3110CSS	3.6	13.7	3500	241	1750	20 mm
760	3.6	13.6	5000	345	1750	24 MM
5CP4116CSS	3.8	14.4	4000	276	1750	20 mm
5CP2140WCS	4.0	15.2	2500	172	1725	20 mm
3CP1120	4.2	16.0	2200	152	1725	16.5 mm
5CP4118CSS	4.2	16.0	4000	276	1750	20 mm
5CP3160CSS	4.3	16.3	3500	241	1750	20 mm
5CP4120CSS	4.5	17.0	4000	276	1750	20 mm
60	4.7	17.9	4000	276	1750	24 mm
700	4.7	17.9	5000	345	1750	24 mm
5CP3120CSS	4.8	18.2	3000	207	1750	20 mm
5CP2150W	5.0	19.0	2000	138	1725	20 mm
5CP3150CSS	5.2	19.8	3000	207	1750	20 mm
5CP5120	6.0	22.8	2500	172	1750	20 mm
5CP5135CSS	6.0	22.8	3500	241	1750	20 mm
5CP5140CSS	6.4	24.3	3000	207	1750	20 mm
5CP6120	7.4	28.1	1200	83	1725	20 mm
56	8.0	30.4	2500	172	1760	24 mm
56HS	8.0	30.4	3000	207	1760	24 mm
5CP6180CSS	8.2	31.0	1500	103	1750	20 MM
5CP6190	10.0	38.0	1200	83	1750	20 mm
7CP6110CS	10.5	39.9	2000	138	1750	24 mm
7CP6160CS	10.6	40.1	2500	172	1750	24 mm

$$\text{Electric Brake Hp} = \frac{\text{gpm x psi}}{1460}$$

Model 3CP1231

DIRECT DRIVE, SOLID SHAFT, 316 STAINLESS STEEL MANIFOLD

Electric Motor - Bell Housing

PUMP MODEL	MAXIMUM FLOW		MAXIMUM PRESSURE		RPM	SHAFT
	gpm	lpm	psi	bar		
3CP1231	2.3	8.7	2000	138	1725	16.5 mm
784	2.9	11.0	5000	345	1750	24 mm
3CP1241	3.6	13.7	2000	138	1725	16.5 mm
786	3.6	13.7	5000	345	1750	24 mm
5CPQ6241CS	4.0	15.2	2000	138	1725	20 mm
3CP1221	4.2	16.0	2000	138	1725	16.5 mm
781	4.7	17.8	5000	345	1750	24 mm
3CP1211CS	5.0	19.0	1700	117	1750	16.5 mm
5CPQ6251	5.0	19.0	2000	138	1725	20 mm
5CPQ6261CSS	5.5	20.9	2000	138	1725	20 mm
5CPQ6271CSS	6.6	25.1	1800	124	1725	20 mm
5CPQ6221	7.4	28.0	1200	83	1725	20 mm
7CP6111CS	10.5	39.9	2000	138	1750	24 mm

$$\text{Electric Brake Hp} = \frac{\text{gpm x psi}}{1460}$$

Model 277

DIRECT DRIVE, SOLID SHAFT, NICKEL ALUMINUM BRONZE MANIFOLD

Electric Motor - Bell Housing

PUMP MODEL	MAXIMUM FLOW		MAXIMUM PRESSURE		RPM	SHAFT
	gpm	lpm	psi	bar		
237	2.3	8.7	1500	103	1725	16.5 mm
247	3.6	13.7	1200	83	1725	16.5 mm
277	4.2	16.0	1000	69	1725	16.5 mm
347	4.0	15.2	1800	124	1725	20 mm
357	5.0	19.0	1500	103	1725	20 mm

$$\text{Electric Brake Hp} = \frac{\text{gpm x psi}}{1460}$$

Plunger Pumps

SOLID SHAFT, BRASS MANIFOLD

PUMP MODEL	MAXIMUM FLOW		MAXIMUM PRESSURE		RPM	SHAFT
	gpm	lpm	psi	bar		
5CP4110CSS	2.2	8.4	4000	276	1750	20 mm
3CP1130	2.4	9.1	2200	138	1725	16.5 mm
5CP3105CSS	2.5	9.5	3500	241	1750	20 mm
5CP4112CSS	2.7	10.3	4000	276	1750	20 mm
740	2.9	11.0	5000	345	1750	24 mm
1810**	3.0	11.4	10000	689	1500	30 mm
5CP4114CSS	3.2	12.1	4000	276	1750	20 mm
3CP1140	3.6	13.7	2200	152	1725	16.5 mm
5CP3110CSS	3.6	13.7	3500	241	1750	20 mm
760	3.6	13.7	5000	345	1750	24 mm
5CP4116CSS	3.8	14.4	4000	276	1750	20 mm
310	4.0	15.2	2200	152	950	20 mm
5CP2120W	4.0	15.2	2500	172	950	20 mm
5CP2140WCS	4.0	15.2	2500	172	1725	20 mm
3CP1120	4.2	16.0	2200	152	1725	16.5 mm
5CP4118CSS	4.2	16.0	4000	276	1750	20 mm
5CP3160CSS	4.3	16.3	3500	241	1750	20 mm
5CP3120CSS	4.5	17.0	3500	241	1645	20 mm
57	4.5	17.0	4000	276	1285	24 mm
5CP4120CSS	4.5	17.0	4000	276	1750	20 mm
60	4.7	17.9	4000	276	1750	24 mm
700	4.7	17.9	5000	345	1750	24 mm
5CP3120CSS	4.8	18.2	3000	207	1750	20 mm
310	5.0	19.0	1500	103	1190	20 mm
5CP2150W	5.0	19.0	2000	138	1725	20 mm
530	5.0	19.0	2500	172	1100	24 mm
5CP5120	5.0	19.0	3000	207	1415	20 mm
5CP3150CSS	5.2	19.7	3000	207	1750	20 mm
56	5.5	20.9	3500	241	1210	24 mm
5CP5140CSS	5.5	20.9	3500	241	1500	20 mm

** 17 - 4SS Stainless Manifolds

$$\text{Electric Brake Hp} = \frac{\text{gpm x psi}}{1460}$$

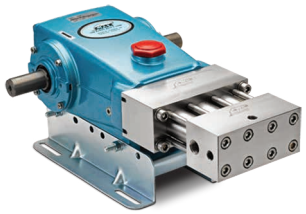

Model 1810

Model 310

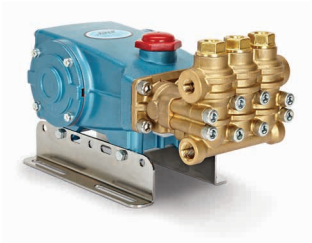

Model 700

Selecting a Power Source

Positive displacement pumps can use a variety of different power sources, including electric motors, gas or diesel engines, hydraulic and pneumatic motors. Note: system power sources must be sized with adequate horsepower to handle the maximum system flow and pressure required.

Commonly Used Formulas

$$\text{Required Electric Brake HP*} = \frac{\text{gpm x psi}}{1460}$$

$$\text{Hydraulic Torque (ft. lbs.) Required} = 3.6 \times \frac{\text{gpm x psi}}{\text{rpm}}$$

*Standard 85% Overall Efficiency

Model 5CP2120W

Plunger Pumps

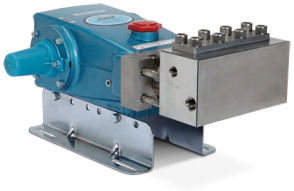

Model 1570

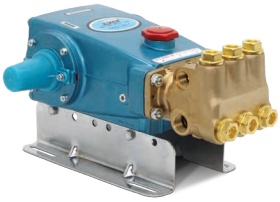

Model 660

Model 1540E

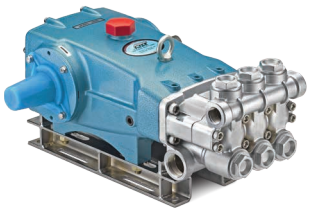

Model 3535

SOLID SHAFT, BRASS MANIFOLD

PUMP MODEL	MAXIMUM FLOW		MAXIMUM PRESSURE		RPM	SHAFT
	gpm	lpm	psi	bar		
5CP6120	6.0	22.8	1600	110	1400	20 mm
5CP5120	6.0	22.8	2500	172	1750	20 mm
5CP5135CSS	6.0	22.8	3500	241	1750	20 mm
1570	6.0	22.8	6000	414	1350	30 mm
5CP5140CSS	6.4	24.3	3000	207	1750	20 mm
5CP6180CSS	6.9	26.1	1500	103	1450	20 mm
650	7.0	26.6	3000	207	1000	30 mm
5CP6120	7.4	28.1	1200	83	1725	20 mm
5CP6190	8.0	30.4	1450	100	1450	20 mm
56	8.0	30.4	2500	172	1760	24 mm
56HS	8.0	30.4	3000	207	1760	24 mm
5CP6180CSS	8.2	31.0	1500	103	1750	20 mm
1560	9.0	34.0	4000	276	1280	30 mm
5CP6190	10.0	38.0	1200	83	1750	20 mm
1050	10.0	38.0	2200	152	958	30 mm
660	10.0	38.0	3000	207	1429	30 mm
3550	10.0	38.0	6000	414	940	35 mm
6810**	10.0	38.0	10000	689	600	45 mm
7CP6110CS	10.5	39.9	2000	138	1725	24 mm
7CP6160CS	10.6	40.1	2500	172	1750	24 mm
7CP6170	11.0	41.6	2000	138	1450	24 mm
1050	12.0	45.4	1800	124	1150	30 mm
7CP6170	12.0	45.4	1800	124	1600	24 mm
1580	12.0	45.4	3000	207	1180	30 mm
1530	15.6	59.3	1500	103	1450	30 mm
1540E	18.0	68.4	1200	83	1100	30 mm
2510	20.0	76.0	2000	138	1450	30 mm
3560	20.0	76.0	4000	276	1160	35 mm
2530	25.0	95.0	1200	83	1025	30 mm
3520	25.0	95.0	2000	138	870	35 mm
3560	25.0	95.0	3000	207	1450	35 mm
3570*	30.0	113.6	3000	207	1080	35 mm
3535	36.0	136.2	1200	83	800	35 mm
3535HS*	40.0	152.0	2000	138	888	35 mm
6835	40.0	152.0	3000	207	625	45 mm
3545	45.0	171.0	1000	69	765	35 mm
3545HS*	50.0	189.3	1500	103	850	35 mm
67070	50.0	189.3	2000	138	653	45 mm
6760	60.0	228.0	1200	83	520	45 mm
67070*	65.0	246.0	2000	138	850	45 mm
6775	75.0	285.0	1200	83	650	45 mm

* Intermittent duty only – operating pump at stated flow and pressure for no more than 50% of time in any given hour.
** 304 Stainless Manifolds

$$\text{Electric Brake Hp} = \frac{\text{gpm x psi}}{1460}$$

Selecting a Drive

A variety of different drive options are offered by Cat Pumps. Most systems are belt-driven by a pulley or clutch, but there are also direct-drive options such as direct coupled, gearbox or hollow shaft direct drive.

Commonly Used Formulas

$$\text{Desired rpm} = \text{Desired gpm} \times \frac{\text{Rated rpm}}{\text{Rated gpm}}$$

$$\text{Pump Pulley*} \times \frac{\text{Pump rpm}}{\text{Motor/Engine rpm}} = \text{Motor Pulley*}$$

*Pitch Diameter

Plunger Pumps

SOLID SHAFT, 316 STAINLESS STEEL MANIFOLD

PUMP MODEL	MAXIMUM FLOW		MAXIMUM PRESSURE		RPM	SHAFT
	gpm	lpm	psi	bar		
3CP1231	2.3	8.7	2000	138	1725	16.5 mm
784	2.9	11.0	5000	345	1750	24 mm
3CP1241	3.6	13.7	2000	138	1725	16.5 mm
786	3.6	13.7	5000	345	1750	24 mm
341	4.0	15.2	1800	124	1725	20 mm
5CPQ6241CS	4.0	15.2	2000	138	1725	20 mm
311	4.0	15.2	2200	152	950	20 mm
3CP1221	4.2	16.0	2000	138	1725	16.5 mm
781	4.7	17.9	5000	345	1750	24 mm
351	5.0	19.0	1500	103	1725	20 mm
3CP1211CS	5.0	19.0	1700	117	1750	16.5 mm
5CPQ6251	5.0	19.0	2000	138	1725	20 mm
5CPQ6221	6.0	22.8	2000	138	1400	20 mm
5CPQ6221	7.4	28.0	1200	83	1725	20 mm
1051	10.0	38.0	2200	152	958	30 mm
3501	10.0	38.0	5000	345	915	35 mm
7CP6111CS	10.5	39.9	2000	138	1725	24 mm
7CP6171CS	10.5	39.9	2000	138	1450	24 mm
1051	12.0	45.4	1800	124	1150	30 mm
3511	14.0	53.2	3000	207	800	35 mm
6811	15.0	57.0	5000	345	600	45 mm
6801	15.0	57.0	7000	483	600	45 mm
1531	15.6	59.0	1500	103	1450	30 mm
1541	18.0	68.4	1200	83	1100	30 mm
2511	20.0	76.0	1500	103	1450	30 mm
2531	25.0	95.0	1200	83	1025	30 mm
3521DHS	25.0	95.0	2000	138	870	35 mm
6821	25.0	95.0	3000	207	615	45 mm
3531D	36.0	136.2	1200	83	800	35 mm
3531DHS*	40.0	152.0	2000	138	888	35 mm
6831	40.0	152.0	2300	159	625	45 mm
3541D	45.0	171.0	1000	69	765	35 mm
6841	48.0	182.4	2000	138	615	45 mm
3541DHS*	50.0	189.3	1500	103	850	35 mm
6761	60.0	228.0	1200	83	520	45 mm

* Intermittent duty only – operating pump at stated flow and pressure for no more than 50% of time in any given hour.

$$\text{Electric Brake Hp} = \frac{\text{gpm x psi}}{1460}$$

Model 311

Model 1051

Model 2531

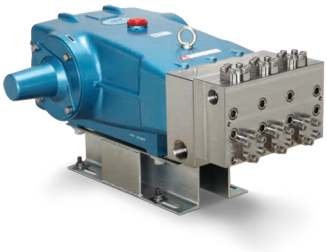

Model 6811

Plunger Pumps

SOLID SHAFT, DUPLEX STAINLESS STEEL MANIFOLD

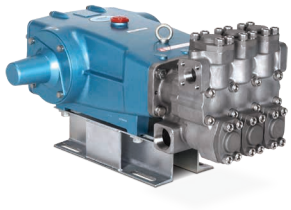

Model 6762

PUMP MODEL	MAXIMUM FLOW		MAXIMUM PRESSURE		RPM	SHAFT
	gpm	lpm	psi	bar		
1051D	10.0	38.0	2200	152	958	30 mm
661D	10.0	38.0	3000	207	1429	30 mm
1051D	12.0	45.4	1800	124	1150	30 mm
6762	60.0	228.0	1200	83	520	45 mm
67102	80.0	302.8	1200	83	540	45 mm
67102	100.0	378.5	1000	69	680	45 mm
157R060	100.0	380.0	2700	186	310	100 mm
152R060	115.0	437.0	1200	83	360	100 mm
152R061	115.0	437.0	2000	138	360	100 mm
152R080	200.0	760.0	1200	83	355	100 mm
152R081	200.0	760.0	1560	108	355	100 mm
152R100	240.0	912.0	1000	69	270	100 mm

$$\text{Electric Brake Hp} = \frac{\text{gpm x psi}}{1460}$$

Model 152R100

BELT DRIVE, SOLID SHAFT, NICKEL ALUMINUM BRONZE MANIFOLD

Model 277

PUMP MODEL	MAXIMUM FLOW		MAXIMUM PRESSURE		RPM	SHAFT
	gpm	lpm	psi	bar		
237	2.3	8.7	1500	103	1725	16.5 mm
277	3.5	13.3	1500	103	1420	16.5 mm
247	3.6	13.7	1200	83	1725	16.5 mm
347	4.0	15.2	1800	124	1725	20 mm
317	4.0	15.2	2200	152	950	20 mm
277	4.2	16.0	1000	69	1725	16.5 mm
357	5.0	19.0	1500	103	1725	20 mm
1057	10.0	38.0	2200	152	958	30 mm
3507	10.0	38.0	5000	345	915	35 mm
1057	12.0	45.4	1800	124	1150	30 mm
3517	14.0	53.2	3000	207	800	35 mm
2537	25.0	95.0	1200	83	1025	30 mm
3527	25.0	95.0	2000	138	870	35 mm
3537	36.0	136.2	1200	83	800	35 mm
3537HS*	40.0	152.0	2000	138	888	35 mm
3547	45.0	171.0	1000	69	765	35 mm
6747	48.0	182.4	2000	138	615	45 mm
6767	60.0	228.0	1200	83	520	45 mm

* Intermittent duty only – operating pump at stated flow and pressure for no more than 50% of time in any given hour.

$$\text{Electric Brake Hp} = \frac{\text{gpm x psi}}{1460}$$

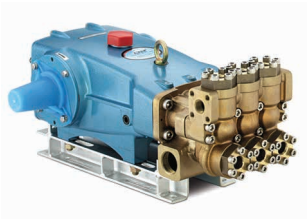

Model 3517

Piston Pumps

PISTON PUMPS, SOLID SHAFT, BRASS MANIFOLD
Belt Drive

PUMP MODEL	MAXIMUM FLOW		MAXIMUM PRESSURE		RPM	SHAFT
	gpm	lpm	psi	bar		
280	3.0	11.4	1000	69	1330	16.5 mm
290	3.5	13.3	1200	83	1200	16.5 mm
333	4.0	15.2	1200	83	1070	16.5 mm
430	5.0	19.0	1000	69	1040	16.5 mm
323	5.0	19.0	1500	103	1000	20 mm
623	6.0	22.8	1200	83	850	25 mm
820	10.0	38.0	1000	69	940	25 mm
390	12.0	45.4	600	41	1200	20 mm
1010	13.0	49.4	700	48	900	25 mm
2520*	25.0	95.0	800	55	772	30 mm
6040	40.0	152.0	1500	103	500	45 mm
6020	60.0	228.0	1000	69	500	45 mm

*Available as a model 2520C with flushed inlet manifold

$$\text{Electric Brake Hp} = \frac{\text{gpm x psi}}{1460}$$

Model 280

Model 820

PISTON PUMPS, SOLID SHAFT, 316 STAINLESS STEEL MANIFOLD
Belt Drive

PUMP MODEL	MAXIMUM FLOW		MAXIMUM PRESSURE		RPM	SHAFT
	gpm	lpm	psi	bar		
281	3.0	11.4	1000	69	1330	16.5 mm
291	3.5	13.3	1200	83	1200	16.5 mm
331	4.0	15.2	1200	83	1070	16.5 mm
431	5.0	19.0	1000	69	1040	16.5 mm
621	6.0	22.8	1200	83	850	25 mm
821	10.0	38.0	1000	69	940	25 mm
1011	13.0	49.4	700	48	900	25 mm
6041	40.0	152.0	1500	103	500	45 mm
6021	60.0	228.0	1000	69	500	45 mm

$$\text{Electric Brake Hp} = \frac{\text{gpm x psi}}{1460}$$

Model 2520

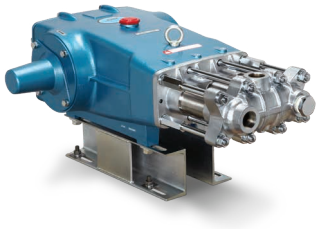

Model 6020

TECH TIP

Pump Rotation

Forward rotation (towards the manifold) is recommended to allow optimum lubrication of the crosshead area. If your installation does not allow for forward rotation, reverse rotation is acceptable if the crankcase oil is above the red dot in the oil gauge. This indicates adequate lubrication.

Forward Rotation

Reverse Rotation

Flushed Manifold Pumps

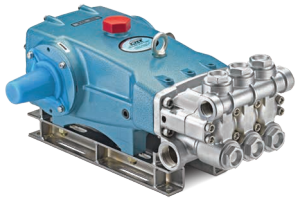

Model 3520C

FLUSHED MANIFOLD PUMPS, SOLID SHAFT, BRASS, NICKEL ALUMINUM BRONZE

Belt Drive

PUMP MODEL	MAXIMUM FLOW		MAXIMUM PRESSURE		RPM	SHAFT
	gpm	lpm	psi	bar		
1810K**	3.0	11.4	10000	689	1500	30 mm
1530C	15.6	59.0	1500	103	1450	30 mm
1540EC	18.0	68.4	1200	83	1100	30 mm
2520C	25.0	95.0	800	55	772	30 mm
3520C	25.0	95.0	2000	138	870	35 mm
3570C	30.0	114.0	3000	207	1080	30 mm
3535C	36.0	136.2	1200	83	800	35 mm

Model numbers ending in " C " indicate flushed cast manifold and " K " indicate flushed block manifold.
**17 - 4SS Stainless Steel Manifolds

$$\text{Electric Brake Hp} = \frac{\text{gpm x psi}}{1460}$$

Model 781K

Model 1051C

FLUSHED MANIFOLD PUMPS, SOLID SHAFT, 316 STAINLESS STEEL MANIFOLD

Belt Drive

PUMP MODEL	MAXIMUM FLOW		MAXIMUM PRESSURE		RPM	SHAFT
	gpm	lpm	psi	bar		
341C	4.0	15.2	1800	124	1725	20 mm
311C	4.0	15.2	2200	152	950	20 mm
781K	4.7	17.9	5000	345	1750	24 mm
351C	5.0	19.0	1500	103	1725	20 mm
1051C	10.0	38.0	2200	152	958	30 mm
661C	10.0	38.0	3000	207	1429	30 mm
3501C	10.0	38.0	5000	345	915	35 mm
7CP6171CCS	10.5	39.9	2000	138	1450	24 mm
7CP6111CCS	10.5	39.9	2000	138	1750	24 mm
1051C	12.0	45.4	1800	124	1150	30 mm
3511C	14.0	53.2	3000	207	800	35 mm
6811K	15.0	57.0	5000	345	600	45 mm
6801K	15.0	57.0	7000	483	600	45 mm
1541C	18.0	68.0	1200	83	1100	30 mm
2531C	25.0	95.0	1200	83	1025	30 mm
3521C	25.0	95.0	2000	138	870	35 mm
6821K	25.0	95.0	3000	207	615	45 mm
3531C	36.0	136.2	1200	83	800	35 mm
6831K	40.0	152.0	2300	159	625	45 mm
3541C	45.0	171.0	1000	69	765	35 mm
6841K	48.0	182.4	2000	138	615	45 mm
6861K	60.0	228.0	1200	83	520	45 mm
67102C	100.0	378.5	1000	69	680	45 mm

Model numbers ending in " C " indicate flushed cast manifold and " K " indicate flushed block manifold.

$$\text{Electric Brake Hp} = \frac{\text{gpm x psi}}{1460}$$

Model 67102

FLUSHED MANIFOLD PUMPS, SOLID SHAFT, DUPLEX STAINLESS STEEL MANIFOLD

Belt Drive

PUMP MODEL	MAXIMUM FLOW		MAXIMUM PRESSURE		RPM	SHAFT
	gpm	lpm	psi	bar		
152R060C	115.0	437.0	1200	83	360	100 mm
152R080C	200.0	760.0	1200	83	355	100 mm
152R100C	240.0	912.0	1000	69	270	100 mm

Model numbers ending in " C " indicate flushed cast manifold and " K " indicate flushed block manifold.

$$\text{Electric Brake Hp} = \frac{\text{gpm x psi}}{1460}$$

High Temperature Pumps

.3400 SERIES, HIGH-TEMPERATURE AND INTERMITTENT RUN DRY

The ".3400" Series pumps feature specially blended seals and V-packings, expanding pump operating performance to 190° F / 88° C. This modification also allows the pump to run intermittently dry without damaging the seals. Standard plunger pumps can be fitted with these specially blended seals. Ordering this configuration requires adding .3400 to pump base model. For example, a 310 pump fitted with high temperature seals will be 310.3400. Contact Cat Pumps for additional information.

Model 1051.3400

Triethylene Glycol (TEG) Pumps, 240° F

HIGH-TEMPERATURE/TEG PUMPS, SOLID SHAFT, BRASS MANIFOLD
Belt and Bell Housing Drive

PUMP MODEL	MAXIMUM FLOW		MAXIMUM PRESSURE		RPM	SHAFT
	gpm	lpm	psi	bar		
3CP1130.44101	2.4	9.1	2200	152	1725	16.5 mm
5CP3105CS.44101	2.5	9.5	3500	241	1725	20 mm
3CP1140.44101	3.6	13.7	2200	152	1725	16.5 mm
5CP2120W.44101	4.0	15.2	2500	172	950	20 mm
5CP2140CS.44101	4.0	15.2	2500	172	1725	20 mm
3CP1120.44101	4.2	16.0	2200	152	1725	16.5 mm
5CP2150W.44101	5.0	19.0	2000	138	1725	20 mm
5CP6120.44101	6.0	22.8	1600	110	1400	20 mm
5CP6120.44101	7.4	28.0	1200	83	1725	20 mm
1050.44101	10.0	38.0	2200	152	958	30 mm
1050.44101	12.0	45.4	1800	124	1150	30 mm
1530.44101	15.6	59.0	1500	103	1450	30 mm
1540E.44101	18.0	68.4	1200	83	1100	30 mm
2530.44101	25.0	95.0	1200	83	1025	30 mm
3535.44101	36.0	136.0	1200	83	800	35 mm

$$\text{Electric Brake Hp} = \frac{\text{gpm x psi}}{1460}$$

Model 3CP1120.44101

HIGH-TEMPERATURE/TEG PUMPS, SOLID SHAFT, 316 STAINLESS STEEL AND NICKEL ALUMINUM BRONZE MANIFOLD
Belt and Bell Housing Drive

PUMP MODEL	MAXIMUM FLOW		MAXIMUM PRESSURE		RPM	SHAFT
	gpm	lpm	psi	bar		
3CP1231.44101	2.3	8.7	2000	138	1725	16.5 mm
3CP1241.44101	3.6	13.7	2000	138	1725	16.5 mm
5CPQ6241.44101	4.0	15.2	2000	138	1725	20 mm
3CP1221.44101	4.2	16.0	2000	138	1725	16.5 mm
5CPQ6251.44101	5.0	19.0	2000	138	1725	20 mm
5CPQ6221.44101	6.0	22.8	2000	138	1400	20 mm
1051.44101	10.0	38.0	2200	152	958	30 mm
1051.44101	12.0	45.4	1800	124	1150	30 mm
3517.44101*	14.0	53.0	3000	207	800	35 mm
1531.44101	15.6	59.0	1500	103	1450	30 mm
1541.44101	18.0	68.4	1200	83	1100	30 mm
3521DHS.44101	25.0	95.0	2000	138	870	35 mm
2531.44101	25.0	95.0	1200	83	1025	30 mm
3531D.44101	36.0	136.2	1200	83	800	35 mm

*Nickel Aluminum Bronze Manifold

$$\text{Electric Brake Hp} = \frac{\text{gpm x psi}}{1460}$$

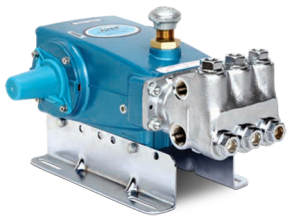

Model 1050.44101

Washout Resistant Pumps

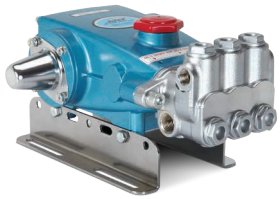

Model 310B

B SERIES, SOLID SHAFT, SPECIAL BRASS MANIFOLD, VEHICLE WASH
Belt and Bell Housing Drive

PUMP MODEL	MAXIMUM FLOW		MAXIMUM PRESSURE		RPM	SHAFT
	gpm	lpm	psi	bar		
340B	4.0	15.2	1800	124	1725	20 mm
310B, 310BQ*	4.0	15.2	2200	152	950	20 mm
5CP2120B	4.0	15.2	2500	172	950	20 mm
5CP2140BCS	4.0	15.2	2500	172	1725	20 mm
350B	5.0	19.0	1500	103	1725	20 mm
5CP2150B	5.0	19.0	2000	138	1725	20 mm

*"Q" Option is designed for applications where a reduced sound level is desirable.

$$\text{Electric Brake Hp} = \frac{\text{gpm x psi}}{1460}$$

Liquid CO_2 Pumps

Model 1530RSCM.CO2

Cat Pumps liquid CO_2 series of pumps feature modifications to accommodate the unique properties of liquid CO_2. Specialty seals are used to handle low lubricity and low temperature that liquid CO_2 applications require. Pump manifolds are modified to allow higher inlet pressures and discharge pressures up to 7,000 psi (483 bar). Drive-end and manifold material combinations are available to cover a wide flow range of flow from 0 .34 to 50 gpm (1.3 to 189.2 lpm).

Cat Pumps offers full technical and engineering support to properly select pumps for the specific application. Pumps are available in brass and 316 stainless steel. Cat Pumps has provided liquid CO_2 pumping solutions for over 25 years, working closely with research facilities, universities, equipment manufacturers and site locations to design and provide the best solutions. Please contact Cat Pumps for additional information.

ATEX Pumps

Under the ATEX Directive, equipment is designated by group, category, and zone. Cat Pumps has been certified as ATEX 2, which also covers ATEX 3 requirements.

ATEX certified high pressure pumps will be specially labeled and supplied with a signed ATEX Declaration of Conformity. Pumps will be numbered with the ".ATEX2" suffix added to the standard pump model number. Contact Cat Pumps for additional information.

The following pump series comply with the ATEX directive for Group 2, Category 2, and Zones 1 and 2. This Group 2 includes Zones G [1 & 2]

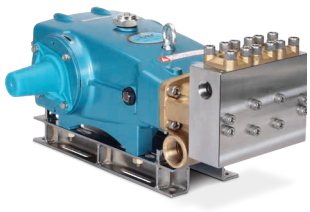

3560 ATEX

Pump Series

- 3CP* Plunger Pumps
- 3 Frame* Plunger Pumps
- 5CP* Plunger Pumps
- 5 Frame* Plunger Pumps
- 7CP* Plunger Pumps
- 7 Frame* Plunger Pumps
- 8 Frame Plunger Pumps
- 15 Frame Plunger Pumps
- 18 Frame Plunger Pumps
- 25 Frame Plunger Pumps
- 28 Frame Plunger Pumps
- 35 Frame Plunger Pumps
- 38 Frame Plunger Pumps
- 60 Frame Plunger Pumps
- 68 Frame Plunger Pumps

* Excludes models equipped with gearbox

1XP Series Portable Extractor Pumps

1XP Pump with AC Induction Motor

- Long Service Life
- Dual Frequency for world-wide use
- Constant torque

AC Induction Motor – 60 Hz, 120V (1750 rpm)

GPM	Max PSI	Pump Assembly	SFA	HP
0.5	600	1XP050.031	4.0	1/3
0.75	500	1XP075.031		
0.85	500	1XP085.031		
1	450	1XP100.031		
1.25	400	1XP125.031		
1.5	325	1XP150.031		
2	250	1XP200.031		
0.4	1000	1XP050.051	8.0	1/2
0.7	1000	1XP075.051		
0.8	1000	1XP085.051		
0.9	800	1XP100.051		
1.2	800	1XP125.051		
1.5	600	1XP150.051		
2	450	1XP200.051		
0.9	1000	1XP100.071	9.0	3/4
1.1	1000	1XP125.071		
1.4	800	1XP150.071		
1.75	700	1XP180.071		
2	550	1XP200.071		
1.45	1000	1XP150.101	12.6	1
1.8	800	1XP180.101		
2	750	1XP200.101		

AC Induction Motor – 50 Hz, 240V (1450 rpm)

GPM	Max PSI	Pump Assembly	SFA	HP
0.40	600	1XP050.031	2.1	1/3
0.60	500	1XP075.031		
0.70	500	1XP085.031		
0.80	450	1XP100.031		
1	400	1XP125.031		
1.2	325	1XP150.031		
1.70	250	1XP200.031		
0.30	1000	1XP050.051	3.8	1/2
0.60	1000	1XP075.051		
0.70	1000	1XP085.051		
0.75	800	1XP100.051		
1	800	1XP125.051		
1.2	600	1XP150.051		
1.70	450	1XP200.051		
0.75	1000	1XP100.071	4.6	3/4
0.90	1000	1XP125.071		
1.20	800	1XP150.071		
1.50	700	1XP180.071		
1.70	550	1XP200.071		
1.20	1000	1XP150.101	6.3	1
1.40	800	1XP180.101		
1.70	750	1XP200.101		

1XP Pump with DC Permanent Magnet Motor

- Low amp draw
- Compact
- Lighter weight

DC Permanent Magnet – 120 Volt - 1/3 HP ODP and TEFC Enclosures

GPM	Max PSI	Amps (at max psi)	Pump Assembly ODP Motor	Pump Assembly TEFC Motor
0.5	600	4.0	1XP050.03DC	1XP050.03DCT
0.75	500	4.0	1XP075.03DC	1XP075.03DCT
0.85	400	4.0	1XP085.03DC	1XP085.03DCT
1	350	4.0	1XP100.03DC	1XP100.03DCT
1.25	300	4.0	1XP125.03DC	1XP125.03DCT
1.5	250	4.0	1XP150.03DC	1XP150.03DCT
2.3	150	4.0	1XP200.03DC	1XP200.03DCT

DC Permanent Magnet – 240 Volt - 1/3 HP ODP

GPM	Max PSI	Amps (at max psi)	Pump Assembly ODP Motor
0.5	600	2.0	1XP050.03DC2
0.75	500	2.0	1XP075.03DC2
0.85	400	2.0	1XP085.03DC2
1	350	2.0	1XP100.03DC2
1.25	300	2.0	1XP125.03DC2
1.5	250	2.0	1XP150.03DC2
2.3	150	2.0	1XP200.03DC2

Engineered Packages

YOU DEFINE. WE DESIGN AND DELIVER.

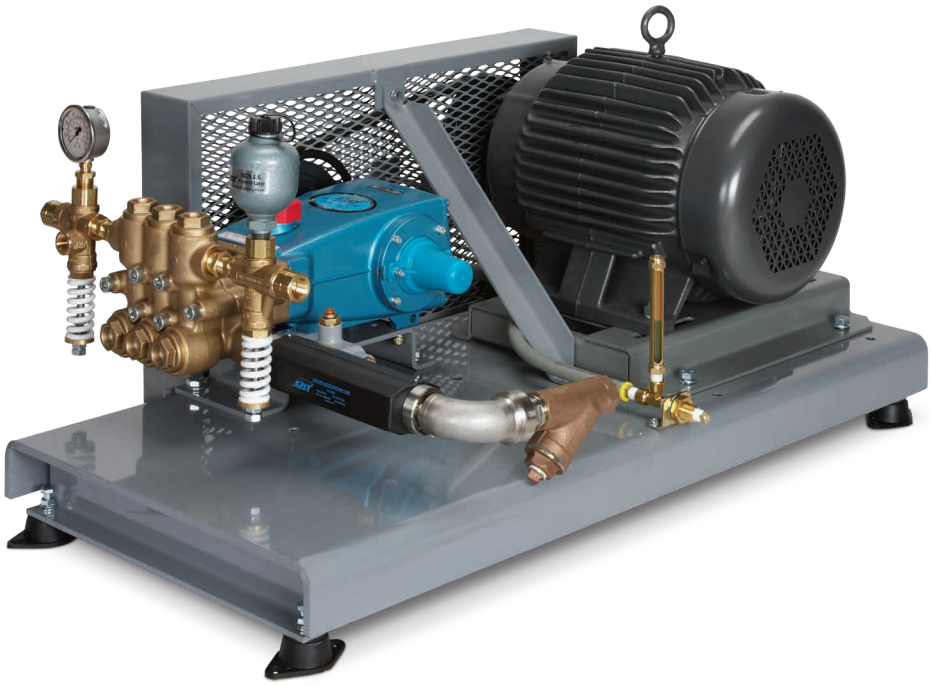

Custom Engineered to Meet Your Application Demands

Cat Pumps is an industry leader in providing customers with quality engineered packages to meet a wide range of application needs. By selecting an engineered package, customers eliminate the hassle and expense of designing, multiple source buying, fabricating and testing. Our knowledgeable and helpful technical sales team assists with proper component selection as well as installation, operation and maintenance support.

All systems are designed, built and pressure tested to verify performance. To begin the quoting process, contact us at (01252) 622031 or email sales@catpumps.co.uk to start your quote today.

With thousands of installations running around the world, Cat Pumps is the supplier of choice for engineered packages.

Call sales at (01252) 622031 or email sales@catpumps.co.uk to start your quote today.

Engineered Packages

System Configuration

With extensive experience building thousands of systems, Cat Pumps can help determine the best configuration for any application.

Base
System design starts with choosing the base that best fits the application. Numerous base configurations are available to meet space, portability, sound and material demands.

- **Standard • Vertically Stacked • Portable • Enclosed • Multiple Pump**

Power Source
A qualified technical staff with extensive experience can assist in recommending the correct product for any power source available.

- **Electric • Gas • Diesel • Hydraulic • Pneumatic**

Drive Package
A wide variety of drive packages are available to complement any power source of choice.

- **Belt • Direct Drive • Gearbox • Flex Coupling/Bell Housing • Clutch**

Accessories
Choose from hundreds of high-quality genuine Cat Pumps accessories for optimum system performance and life.

- **Regulator • Unloader • Relief / Pop-off Valve • Pressure Gauge**
- **Pulsation Dampener • Inlet Stabilizer • Inlet Filter / Strainer • Guns • Oil**

Cat Pumps Advanced Options

Ask about the wide variety of advanced options, designed to help provide maximum system performance and protection.

Options include:

- **Variable Frequency Drives**
- **PID Loop (varies speed of pump to maintain system pressure)**
- **Multiple Pump Systems**
- **Low-Pressure Seal Monitors**
- **Auto Shutdowns (Temperature and Low Inlet Pressure)**
- **Interconnecting Pipework**
- **Stainless steel, GRP water tanks**

Other options to suit your application needs are available upon request. Contact Cat Pumps for more information.

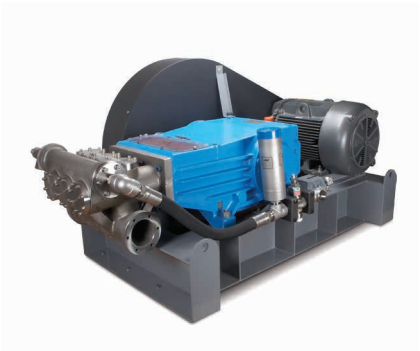

Cat Pumps occupies over 149,000 sq. ft. at its world headquarters in Minneapolis, MN.

Cat Pumps Locations

Cat Pumps – World Headquarters
1681 94th Lane Northeast
Minneapolis, MN 55449
USA

P: (763) 780-5440
F: (763) 780-2958
techsupport@catpumps.com
www.catpumps.com

Territories Served
U.S., Canada

International Division
P: (763) 780-5440
F: (763) 785-4329
intlsales@catpumps.com
www.catpumps.com

Territories Served
Africa, Asia, Australia, Central and South America, Mexico, Middle East, New Zealand, Turkey

Cat Pumps International N.V.
Heiveldekens 6A
2550 Kontich
Belgium

P: 32 3 450 71 50
F: 32 3 450 71 51
cpi@catpumps.be
www.catpumps.be

Territories Served
Western Europe (except U.K., Germany, and Austria)

Cat Pump (U.K.) Ltd.
1 Fleet Business Park, Sandy Lane
Church Crookham
FLEET, Hampshire GU52 8BF
England

P: +44 1252 622031
F: +44 1252 626655
sales@catpumps.co.uk
technical@catpumps.co.uk
www.catpumps.co.uk

Territories Served
U.K. and Ireland

Cat Pumps Deutschland GmbH
Buchwiesse 2, D-65510
Idstein
Germany

P: +49 6126 9303 0
F: +49 6126 9303 33
catpumps@t-online.de
www.catpumps.de

Territories Served
Austria, Commonwealth of Independent States (CIS), Germany and Eastern Europe

SALES, DISTRIBUTION, SERVICE Call today for product and application assistance. (01252) 622031 or visit us at www.catpumps.co.uk

The Pumps with Nine Lives

CAT PUMPS (U.K.) LTD.
1 FLEET BUSINESS PARK, SANDY LANE, CHURCH CROOKHAM
FLEET, HAMPSHIRE GU52 8BF, ENGLAND
P: +44 1252 622031 • F: +44 1252 626655
sales@catpumps.co.uk • technical@catpumps.co.uk • www.catpumps.co.uk

©2018 Cat Pumps Inc. All rights reserved. All written and visual data contained in this document are based on the latest product information available at the time of publication.
Cat Pumps reserves the right to make changes at any time without notice. All other brand names or marks are used for identification purposes and are trademarks of their respective owners.

PN 99CATUK001 Rev E 20043 2/20